THE CANTERBURY "J" CLASS (ONE DESIGN) OWNERS ASSOCIATION INCORPORATED.

Class Rules October 2026



As Accepted 2000.

Revised October 2010.
Revised October 2014
Revised October 2016
Revised February 2018
Revised October 2021
Revised October 2024
Revised October 2026

Revised February 2014.
Revised October 2015
Revised October 2017
Revised October 2020
Revised October 2022
Revised October 2025

1) GENERAL

1.1 The design is based on the full sized "J" class yacht Ranger with design changes to provide a model with good sailing abilities that is easily controlled by radio. The rules serve to control the parameters of construction to allow for racing between boats of similar speed and characteristics. Material specifications and methods of construction are controlled with the intention of encouraging home building and keeping the class affordable to a large range of people. It is intended that the rules of the class shall remain unchanged over time to ensure that All boats are able to retain a competitive position within the class and thus hold their value.

1.2 Terminology: In these Rules the word “shall” and “will” means the pertinent rule must be strictly adhered to. The word “may” means that this is optional.

1.3 The Canterbury J Class RC yacht shall consist of;

a. a fiberglass hull shell from the Class Association's official mould(s) and produced by the Class Associations official hull manufacturer(s).
b an external lead keel and internal lead trim weight from the Class Association's official mould(s) and produced by the Class Associations official lead manufacturer(s).
c. sails, rigging and a rudder in accordance with the class rules.
d. a bow bumper of a type approved by the Measurers.
e. a radio control system constrained to two channels controlling the rudder and coupled jib & main booms/sails.

2) HULL, KEEL, TRIM WEIGHT, RUDDER and DECK

2.1

a. The hull (shell) is a gel coated one piece moulding of glass reinforced polyester resin produced in accordance with clause 1.3 a. No fibres or cloth other than glass shall be used as a reinforcement of any resins used for completing the construction
of the hull shell including its deck and rudder blade, but excluding any hull fittings that are not permanently attached and can be easily detached and reattached.
b. The registered hull number label as shown and detailed below is to be attached by polyester or epoxy resin into the interior of the hull on the starboard side between the two keel studs and between 70mm and 140mm below the gunwale. All the hull numbers shall be in sequential order and the Class Associations official hull and lead coordinator(s) shall be responsible for supplying and inserting this label.

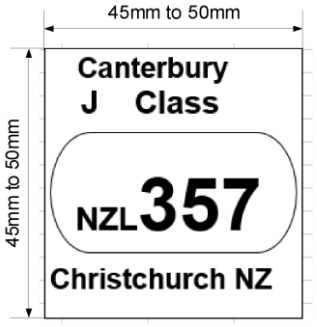

c. A timber plate between 4mm and 7mm thick shall be glued directly onto hull shell floor at the very bottom with no additional weight between it and the hull shell floor. It shall follow the internal shape of the hull as close as possible and be covered by a two part epoxy or polyester resin. The Class Association's official hull and lead coordinator(s) shall be responsible for supplying and inserting this timber plate and applying the resin.

d. The external keel is a one piece moulded lead item produced in accordance with clause 1.3 b. No material other than lead can be used. Stainless steel threaded studs or bolts shall be inserted at the time of manufacture using the attached formers. It shall be labelled with its weight and weigh between 3550 Grams and 3850 Grams including the studs/bolts, nuts and washers.

e. The internal trim weight is a one piece moulded lead item produced in accordance with clause 1.3 b. No material other than lead can be used. It shall have an 8mm diameter fixing hole centred 40mm (plus or minus 3mm) from the wider end and central between either edges. It shall be labelled with its weight and weigh between 450 Grams and 650 Grams after being drilled.

f. The combined weight of the lead keel and lead trim weight supplied shall weigh between 4200 Grams and 4300 Grams.

2.2 **Dimensions of the hull.**

All the relative hull measurements shall be taken from the outside of the fiberglass hull shell and shall exclude the bow bumper and any protective strips or belting around the gunwales. If used, these shall have a maximum thickness of 3mm external to the hull shell.

Maximum overall length: 1220 mm

Beams as measured from the bow:

at quarter length (305 mm): 145 -150 mm

at half length (610 mm): 215 -220 mm

at three quarter length (915 mm): 185 -190 mm

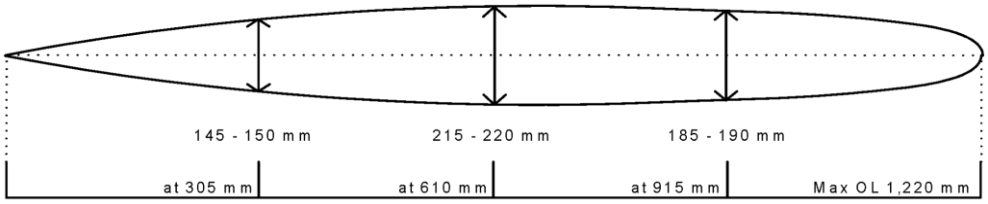

2.3 **Appendages.**

No appendages shall be attached externally to the boat which extend beyond or below the gunwale, excepting;

a a bow bumper

b attachments for the backstay

c the rudder and its lower support.

2.4 The keel shall be bolted flush to the bottom of the keel stub and may be prepared and filled to provide a smooth underwater finish.

If the supplied lead keel is of a size or shape different from the hull shell, it can undergo minor alterations in order to conform to the keel stub shape.

No altering of the hull shell is allowed. No other additional weight or spacers shall be inserted between the keel stub and the external lead keel

2.5 The dimension of the stern post back edge shall be a maximum of 215mm. This shall e measured along the stern post from; the lower edge of the keel (lower rudder support included) to the intersecting lines of the hull.

2.6 The trim weight shall be bolted in place using the front keel bolt/stud and lie directly and flat on the timber plate/resin floor with the tapered end facing forward. It shall be visible and accessible for inspection and shall not otherwise be altered from its original supplied state. Fittings may be attached to the trim weight.

2.7 The weight of the complete boat with mast, booms, rigging, sails, and radio gear, Including batteries, of a type and size normally used in radio controlled yachts, shall not be less than 6.500 kg when carrying the “A" rig as per the measurement diagrams.

2.8 The Rudder profile shall not exceed the official pattern (see relevant page for pattern) the rudder post shall be included within this area for measurement purposes. No fairing between the top of the rudder and the hull or between the keel and the leading edge of the rudder is permitted. The rudder thickness shall not exceed 15mm. The rudder shall not be ballasted.

2.9 The rudder may be mounted using a lower fitting and shall lie parallel with the stern post with a gap not exceeding 4mm. The rudder lower fitting shall be no wider than the keel width at the attachment point.

3.0 **The Deck.**

3.1 Is defined as floor like exterior structure(s) or platform(s) on top of the hull and shall have a thickness not exceeding 5mm.

3.2 For the purposes of measurement, a straight line is taken from the bow and stern of the boat and is established as the ”base line”. Establishing this base line will exclude the bow bumper, protective strip(s), belting and toe rail, it is divided into 2 areas, the “fore deck” and the “rear deck”.

3.3 The mast, step and mast stub, all small essential deck fittings, flat deck level Hatches and toe rails are exempt when considering “structures”.

3.4 **Fore deck**

3.4.1 This may be raised and rounded.

3.4.2 No part of the deck is permitted above the “base line”.

3.4.3 The “ending” of the raised deck may be any shape.

3.4.4 The ending of this deck shall not extend past a point 610mm from the bow.

3.4.5 Any structure has its height limited to the same as this deck, the base line.

3.5 **Rear deck**

3.5.1 This may be raised or rounded and no higher than 5mm above the top of the gunwale at any point.

3.5.2 Any structures are limited to a maximum of two, a main (winch) hatch or access point and rear (rudder) hatch or access point.

3.5.3 These two structures when complete and in place shall;

a Have the maximum height not exceeding the base line plus 25mm.

b Be separated by a minimum of 150mm.
c Be square, rectangular or circular.
d Have the main hatch with no side exceeding 160mm long, not exceed a diameter of 180mm and not exceed 256 square centimetres.
e Have the rudder hatch with no side exceeding 106mm long, not exceed a diameter of 120mm and not exceed 114 square centimetres.

This class rule begins at hull number 398 (External lead); 437 (Internal lead) all older boats are subject to clauses 8.2 and 8.3 providing they are and remain in their originally built condition and configuration with no modifications or additions, temporary or otherwise.

3) <u>RIG</u>

3.1 A rig is defined as a mast, a mainsail and its boom, a jib with its boom, all with permitted fittings and rigging.

3.2 Masts

3.2.1 Masts shall comply with the measurement specifications in these rules. The basic mast section shall be constructed of either aluminium alloy or wood with a diameter of no less than 9mm. No other materials will be allowed. Fittings however may be of other materials.

3.2.2 Masts may be stepped on or through the deck.

3.2.3 Mast stubs shall be permitted.

3.2.4 Measurement bands in a colour that contrasts with the mast shall be displayed as per the sail and mast diagram and chart.

3.2.5 Above the lower band 1, masts shall be of constant external circular diameter without grooves for internal sail tracks. All fittings, holes, slots etc shall be ignored when considering the requirements of diameter. Internal stiffening and joining sleeves are permitted.

3.2.6 **This clause applies to hull numbers 358 >**

The only positioning points available for the mast at deck level, (deck or keel stepped) shall be that the front of the mast is unable to be moved or placed forward of a point 490mm from the bow and the rear of the mast unable to be moved or placed behind a point 540mm from the bow.

Grandfather clause for hull numbers < 358

The centre of the mast / mast stub shall pass through the deck between points 490 -540 mm from the bow. The center of deck stepped masts shall also be positioned between these two points on the deck.

3.2.7 For the purposes of measurement the deck level shall be measured from a straight line between the gunwales at a distance of 530 mm from the bow.

3.3 **Fittings:** Each mast may have:

3.3.1. One wind vane.

3.3.2. One back stay crane to extend the fixing position of the backstay to the mast head beyond the allowed roach of the mainsail.

3.3.3. Attachments for jib stay or halyard and shrouds.

3.3.4. One set of spreaders and their attachments.

3.3.5. Attachments for the mainsail luff, head, and tack.

3.3.6 Below the lower band 1, any fitting or system may be used to step, support or control the position of the mast or boom.

3.3.7. A gooseneck fitting of any type or style and its attachments.

3.3.8. A kicking strap and its attachments. This may be combined with the gooseneck fitting.

3.3.9. A fitting or system to mount the mast on the mast step.

4) <u>STANDING RIGGING</u>

4.1. Masts shall be supported by:

4.1.1 Jib stay and/or jib halyard shall intersect the mast below band 2. Forestays of a rigid type will not be permitted.

4.1.2. One pair of shrouds with optional inner lower stays. Spreaders will be permitted but shall be restricted to one set on each mast.

4.1.3. One backstay which may be split into a two part bridle no higher than 300 mm above the deck to allow for tensioning adjustment if desired.

5) <u>BOOMS</u>

5.1.1. Construction: Booms shall be aluminium alloy, carbon fibre tube or wood and of a constant external circular diameter, or constant rectangular cross-section, excluding fittings. Internal sail tracks shall not be permitted.

5.1.2. Main boom fittings: Each main boom may have:
a gooseneck fitting of any type or style.

5.1.3. Jib boom fittings: Each jib boom may have:

a an attachments for jib stay, tack, sheet, clew, and topping lift

b a Boom swivel.

c a counterweight which shall not extend beyond the bow when measured on the centre line.

6) <u>SAILS</u>

Sail dimensions shall be restricted to the three rigs A, B, and C as shown in the measurement Diagram in these Rules.

6.1.1. Sails may be made of any material.

6.1.2. Sails shall comply with the dimensions given in the Measurement diagram in these Rules(see page 13).

6.1.3. During measurement sail battens need not be removed and sails may remain attached to the spars.

6.1.4. The same sail material and weight shall be used throughout the body of each sail.

6.1.5. Seams, including reinforcements and tabling, shall not exceed 15 mm in width.

6.1.6. Corner reinforcements for the head, tack and clew are exempt from the width restriction of rule 6.1.5 but limited to a maximum width of 20mm. The reinforcement is limited to 125mm in length in any direction when measured from the corner measurement point.

6.1.7. Telltales may be fitted to mainsails and to jibs.

6.2 Mainsails

6.2.1 Each mainsail shall be made of a maximum of four panels joined by seams which shall not be closer than 150 mm to a corner. No pleat, cut or tuck shall be permitted on any panel.

6.2.2. Any method of attachment of sails to the mast is permitted with the exception of an internal grooved sail track.

6.2.3 The leech or foot of the sail shall not be convex between measurement points.

6.2.4. There may be up to three battens supporting the leach. Each batten shall be fixed within 3 mm of each measurement point on the sail leach. The top batten shall not exceed 75 mm in length and the other two battens shall not exceed 100mm in length.

6.2.5. No part of the mainsail shall extend beyond the lower edge of the upper mast measurement band 3 or the upper edge of the lower mast measurement band 1.

6.3 Jibs

6.3.1. Each jib shall be made with a maximum of three panels joined by seams that shall be no closer than 100 mm to the corner measurement point. No pleat, cut or tuck shall be permitted on any panel.

6.3.2. The luff tabling may envelope the jib stay and a luff tube may be fitted provided that No support against forestay sag is gained by the fitting of such a tube.

6.3.3. The jib leach shall not extend outside a straight line drawn from the clew measurement point to a point 20 mm aft from the upper measurement point.

6.3.4. If used the maximum number of battens to support the jib leach shall be two and their positioning on the leach is optional. There may be only one batten if desired.

The battens shall not exceed 75 mm in length.

7) CLASS INSIGNIA, SAIL NUMBERS and NATIONAL LETTERS.

7.1 Class Insignia

7.2.1. The class insignia shall be displayed in accordance with Appendix E, Radio Sailing Racing Rules.

7.2.2. It shall be placed between 150mm and 450mm from the head of the main Sail. (refer to supplementary sheet for placement details)

7.2.3. Helvitica or Arial fonts shall be used.

7.2.4. The "**c**" shall be contained within the hook of the "**J**" in line with both the top and extreme left side of the "J"

7.2.5. The dimensions shall be as per the following diagram and have a tolerance of $\pm$ **2mm**.

7.2.6 Sails measured and signed off prior to October 2020 shall have the letter "**J**" dimensions subject to clause 8.2, the grandfather clause.
(note the "phase in" period for this change will end on 10th October 2021)

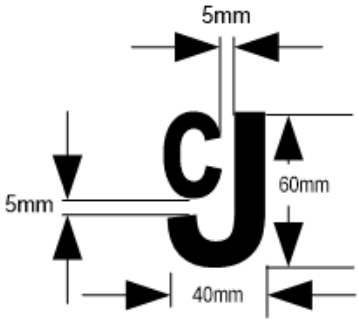

7.2 Sail Numbering.

7.2.1. Sail numbers shall be the hull number up to and including the last three digits of the hull number and displayed in accordance with Appendix E, Radio Sailing Racing Rules. The requirement to allow for a prefix or suffix shall not apply.

https://canterbury-j-class.nz/wp-content/uploads/THE-CANTERBURY-J-CLASS-RULES-2024.pdf

7.3 National Letters

7.3.1. National letters shall be displayed in accordance with Appendix E, Radio Sailing Racing Rules, but is not compulsory.

(refer to Supplementary sheets for class insignia, sail numbering and national letter detail)

8) Measuring

8.1. A measurement process can be undertaken and if the finished boat is found to meet all the class rules a measurement certificate may be issued. The measurement process must be completed by the Class Associations official Measurer(s). The certificate remains valid providing the boat is maintained to the class rules. Measurement certificates can only be issued or replaced by the Class Associations Official measurer(s).

8.2. Any alterations or replacements shall be subject to the current class rules.

8.3. Any rule changes made at an AGM shall by default allow old boats with a current measurement certificate to continue with full recognition of said certification. (The Grandfather Clause)
At the AGM where a new rule is introduced and accepted, the Grandfather clause may be over-ridden by a vote of 2/3rd majority of attendees.

Appendix A, Internal weighted Canterbury J class (One Design) RC yachts.

1) The Canterbury J Class RC yacht may also be made with and internal keel weight.

2) Hulls to be made from the Associations official moulds, produced by the Class Associations official hull manufacturer(s) and supplied by the Canterbury J Class (One Design) Association.

3) Lead keels and trim weights to be made from the Associations official moulds, produced by the Class Associations official lead keel and trim weight manufacturer(s) and supplied by the Canterbury J-Class (One Design) Association.

4) Trim weights to be supplied with an approved mandatory spacer provided by the Canterbury J-Class (One Design) Association.

5) Lead keels and trim weights to be installed as per the Canterbury J Class (One Design) class rules instructions for internal weighted Canterbury J Class (One Design) RC yachts.
A. The keel weight shall be bonded to the inside of the keel shell.

B. If the supplied keel is difficult to locate inside the hull shell it can undergo minor alterations to allow it to fit, otherwise no alterations to the lead keel are allowed.

C. The rear keel bolt / stud may be removed.

D. No alterations to the hull shell are allowed.

E. The trim weight complete with the supplied spacer / packer shall be bolted in place using the front keel bolt/ stud with the tapered end facing forward, it shall be visible, accessible, and removable for inspection and shall not otherwise be altered from its original state.

RUDDER TEMPLATE (as close to maximum size as possible, printing may distort).

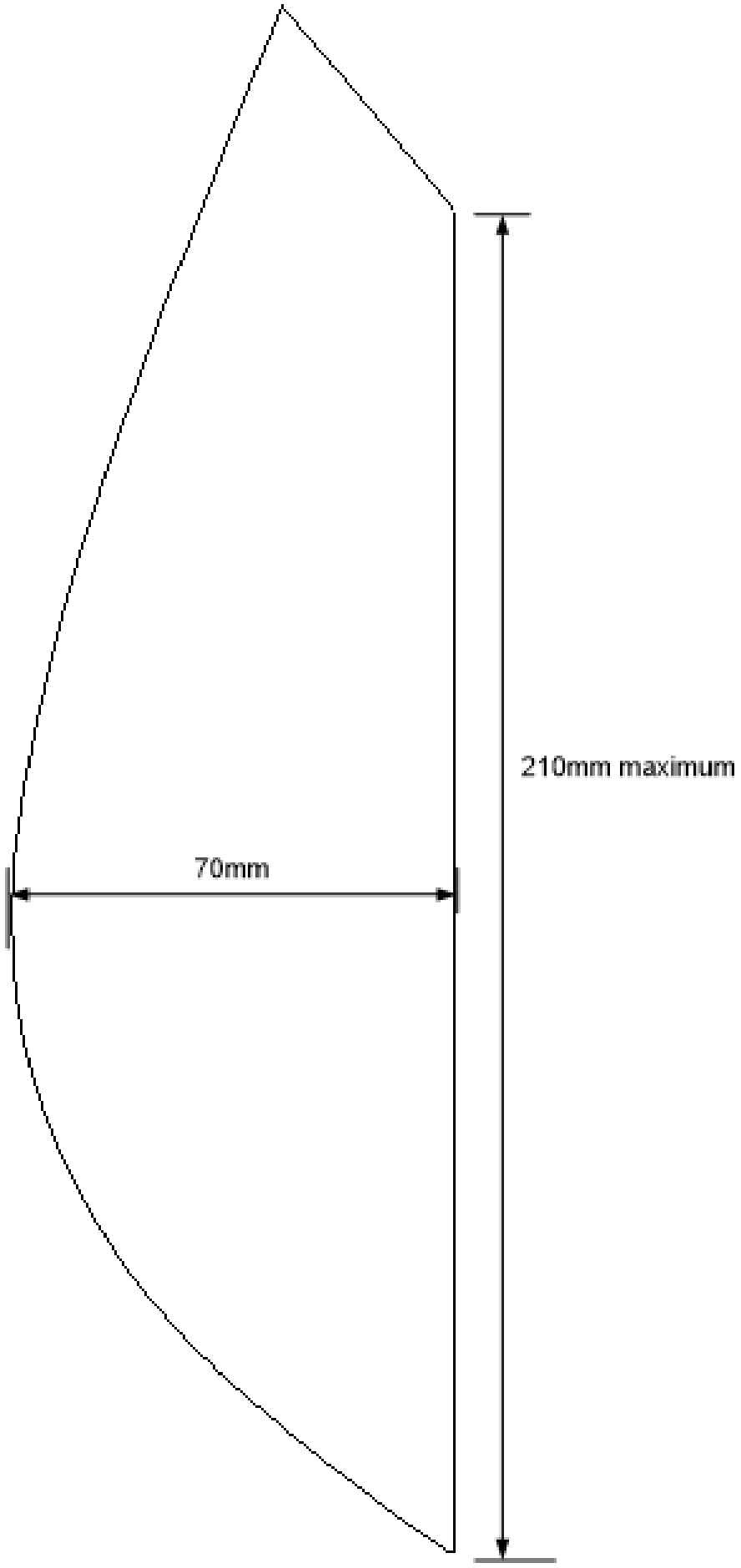

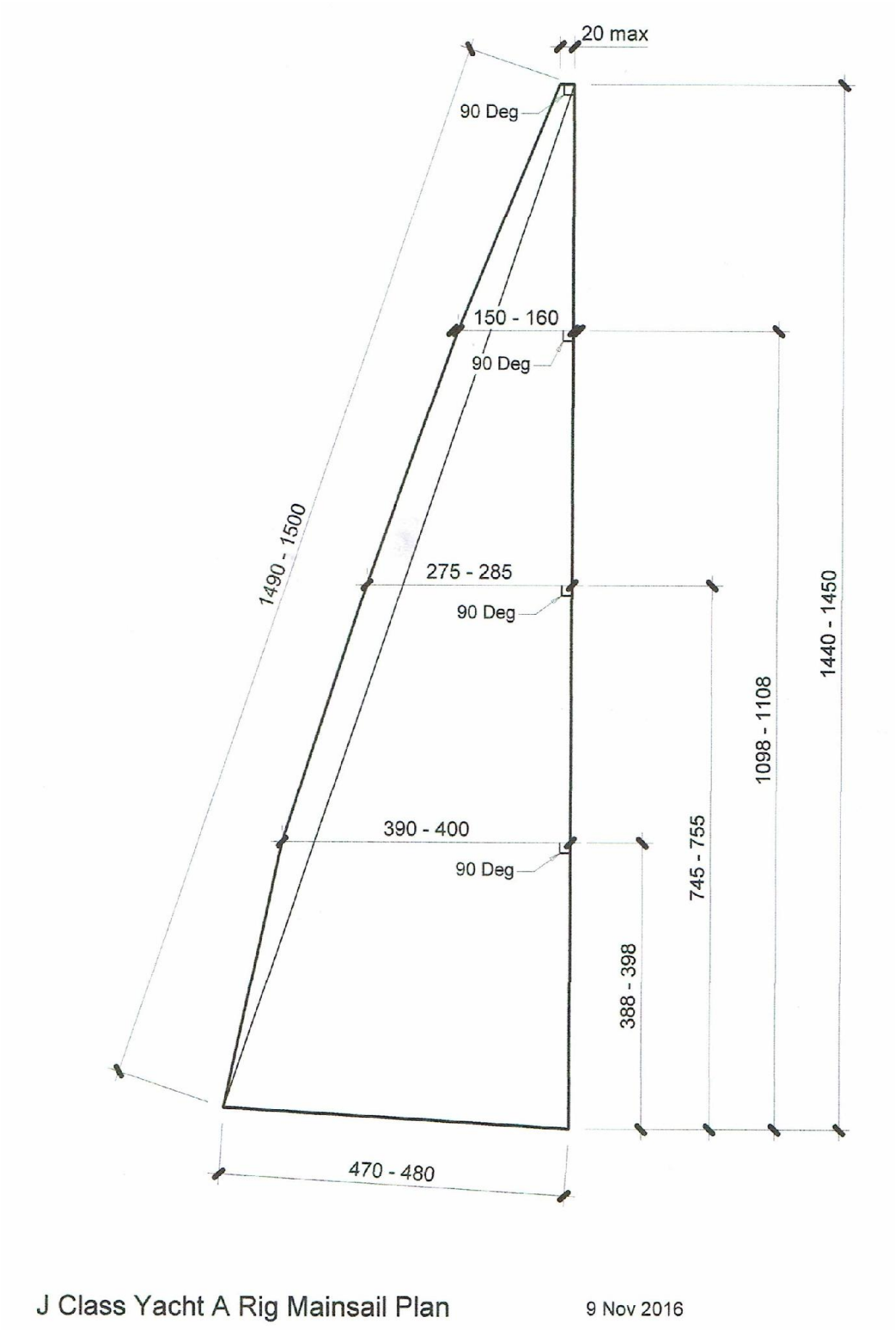

J Class Yacht A Rig Mainsail Plan 9 Nov 2016

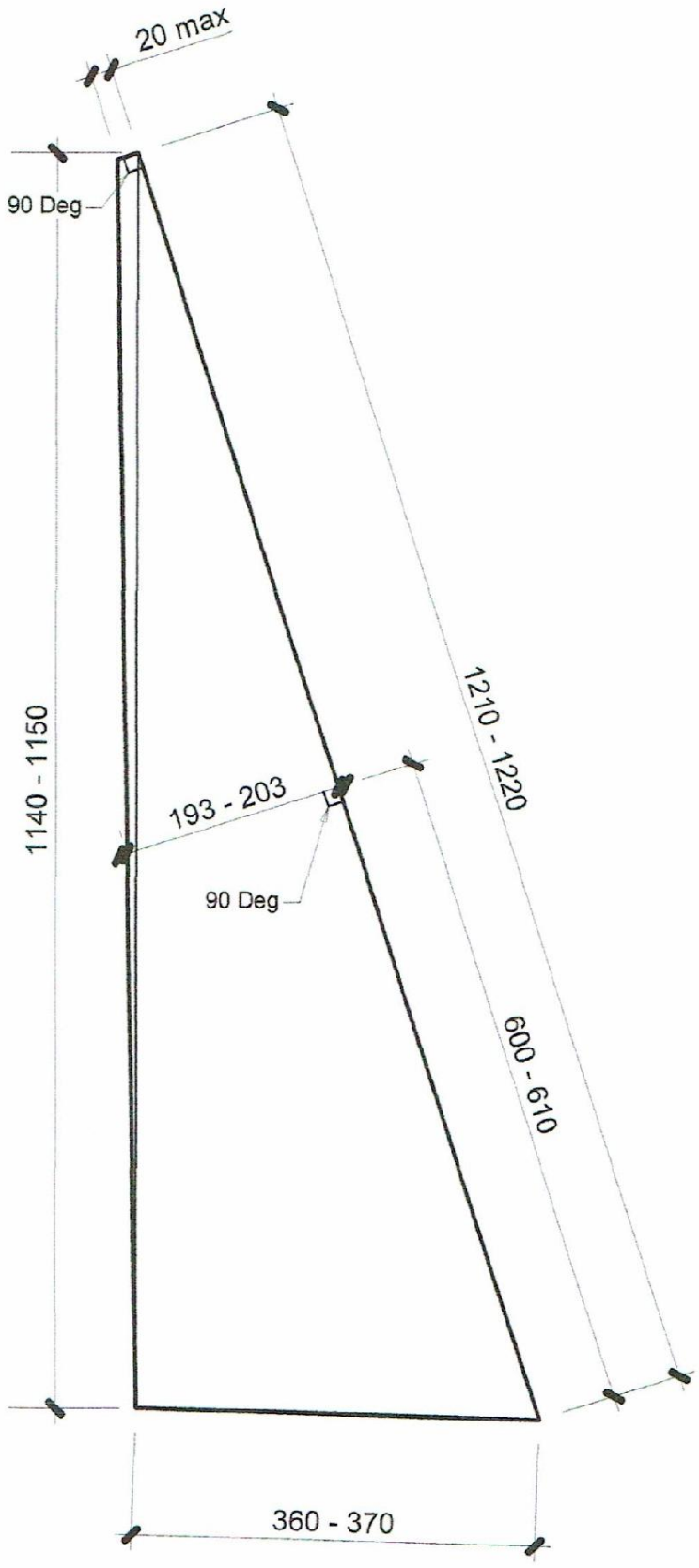

J Class Yacht A Rig Jib Sail Plan 19 Oct 2016

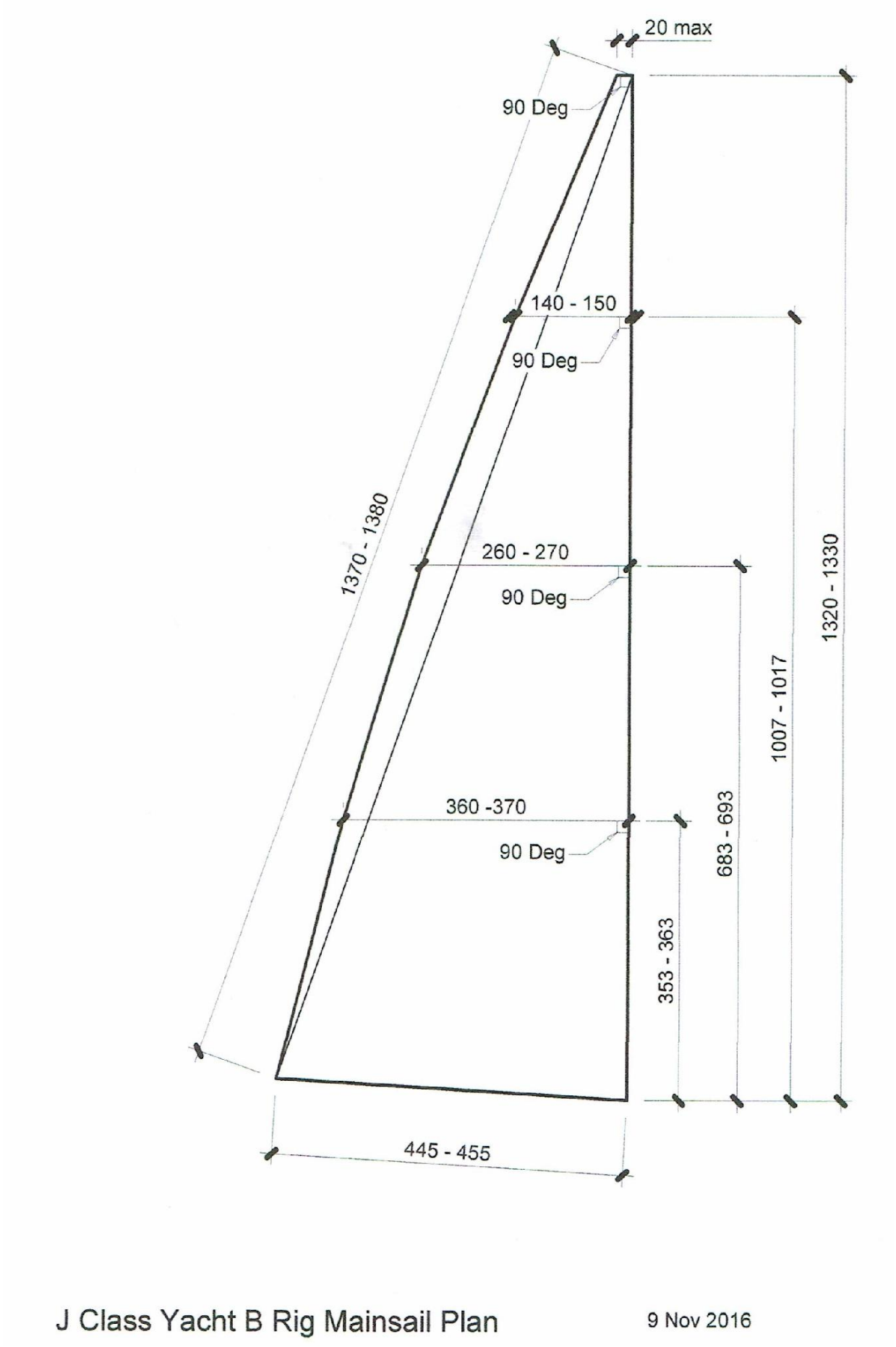

J Class Yacht B Rig Mainsail Plan 9 Nov 2016

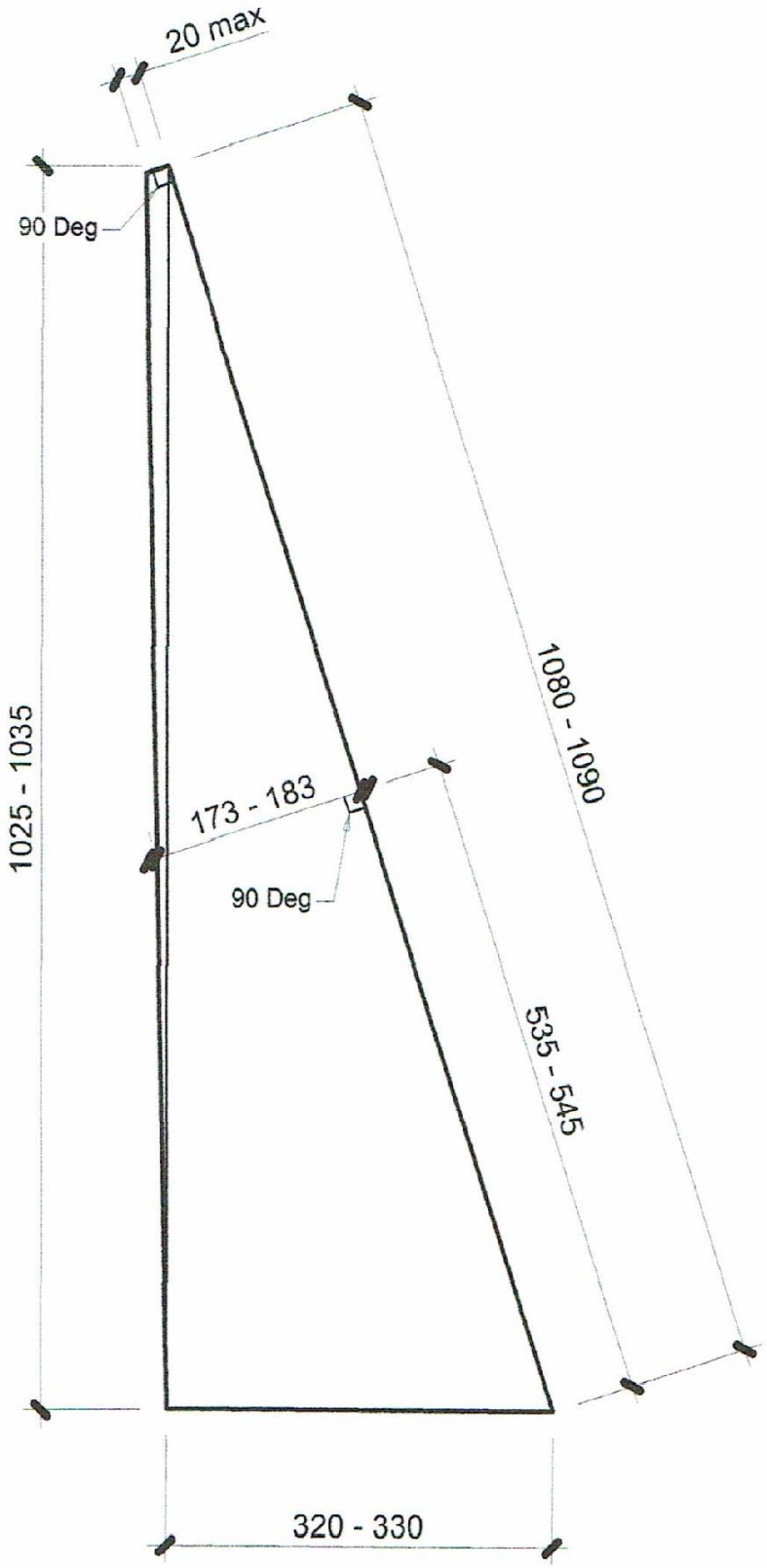

J Class Yacht B RigJib Sail Plan 25 Oct 2016

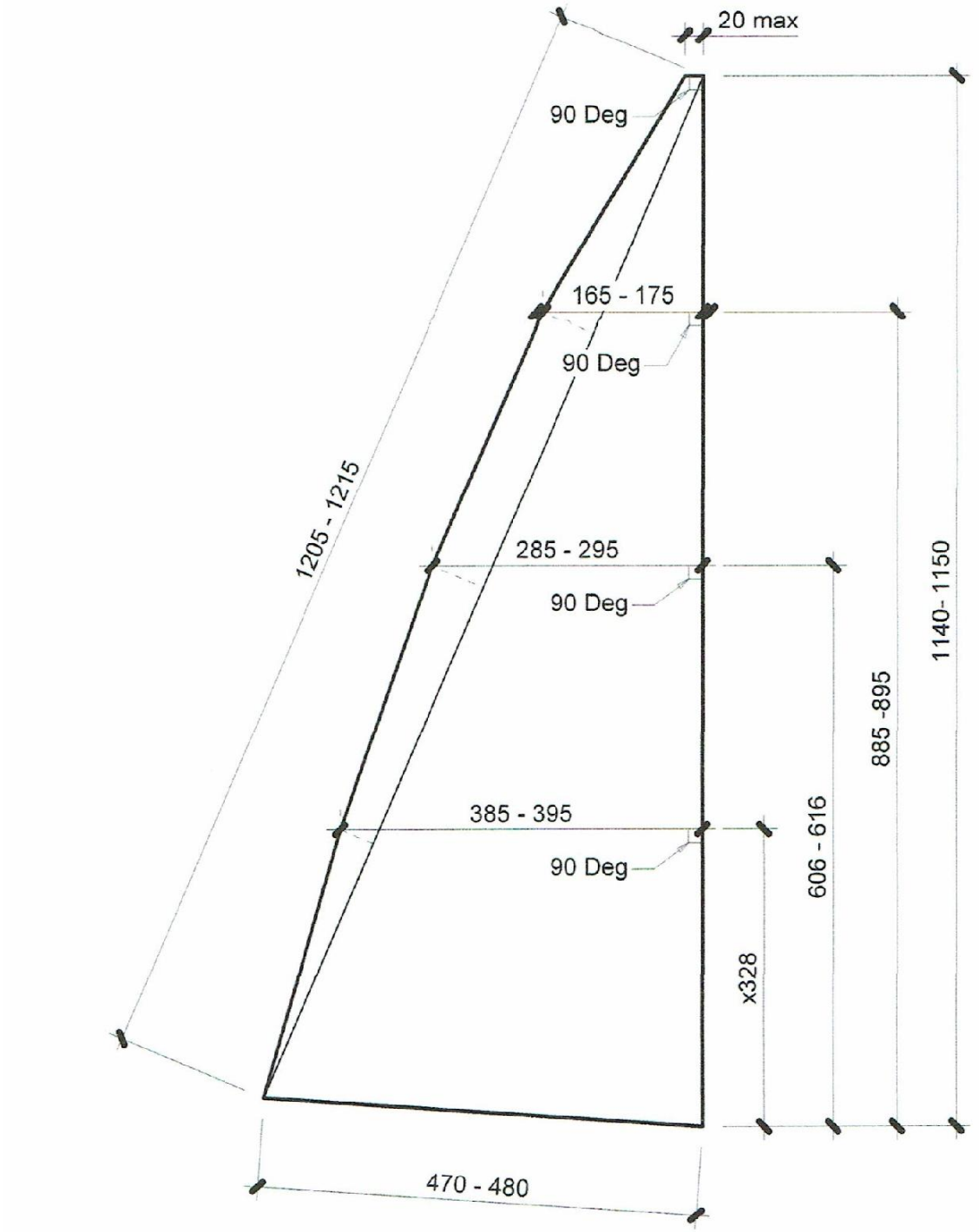

J Class Yacht C Rig Mainsail Plan 26 Oct 2016

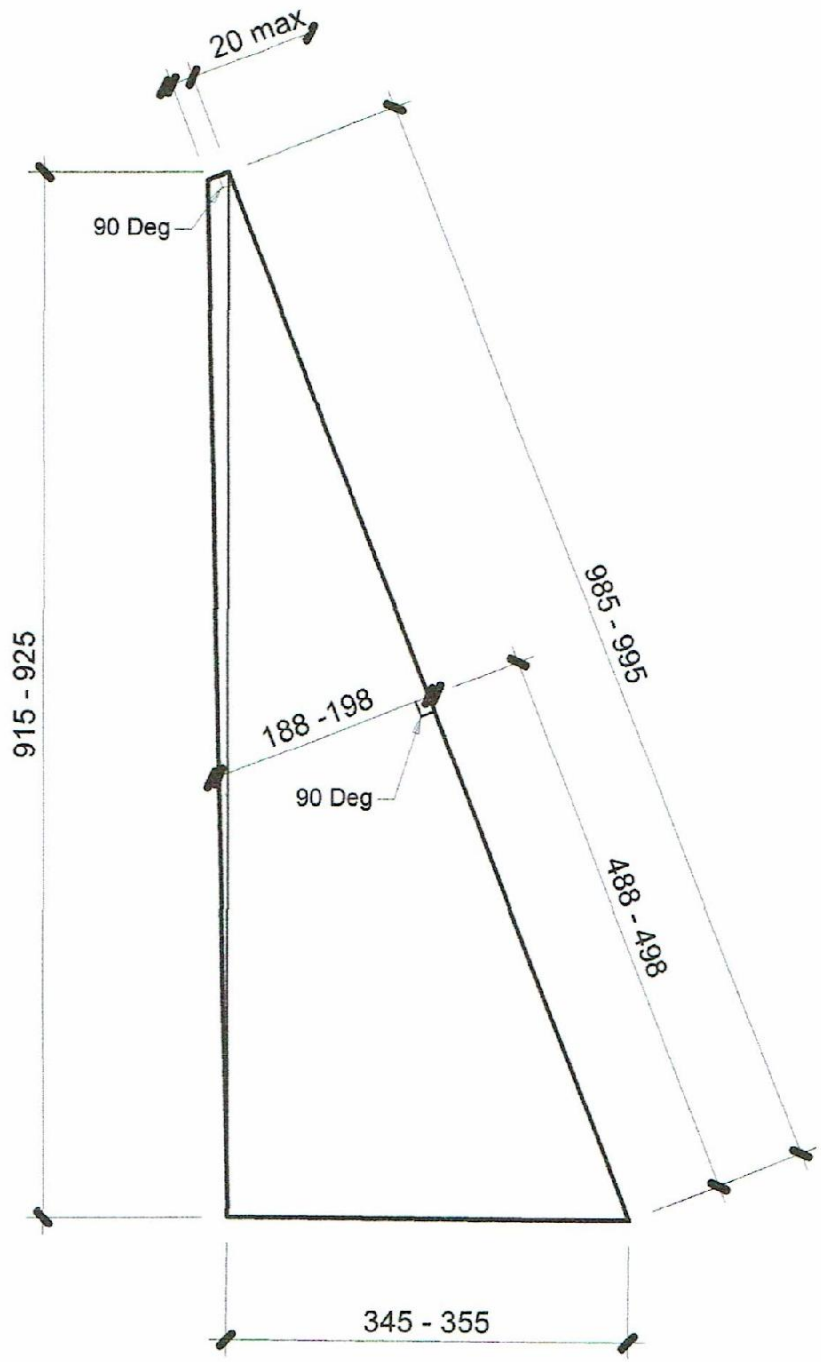

J Class Yacht C Rig Jib Sail Plan 4 Nov 2016

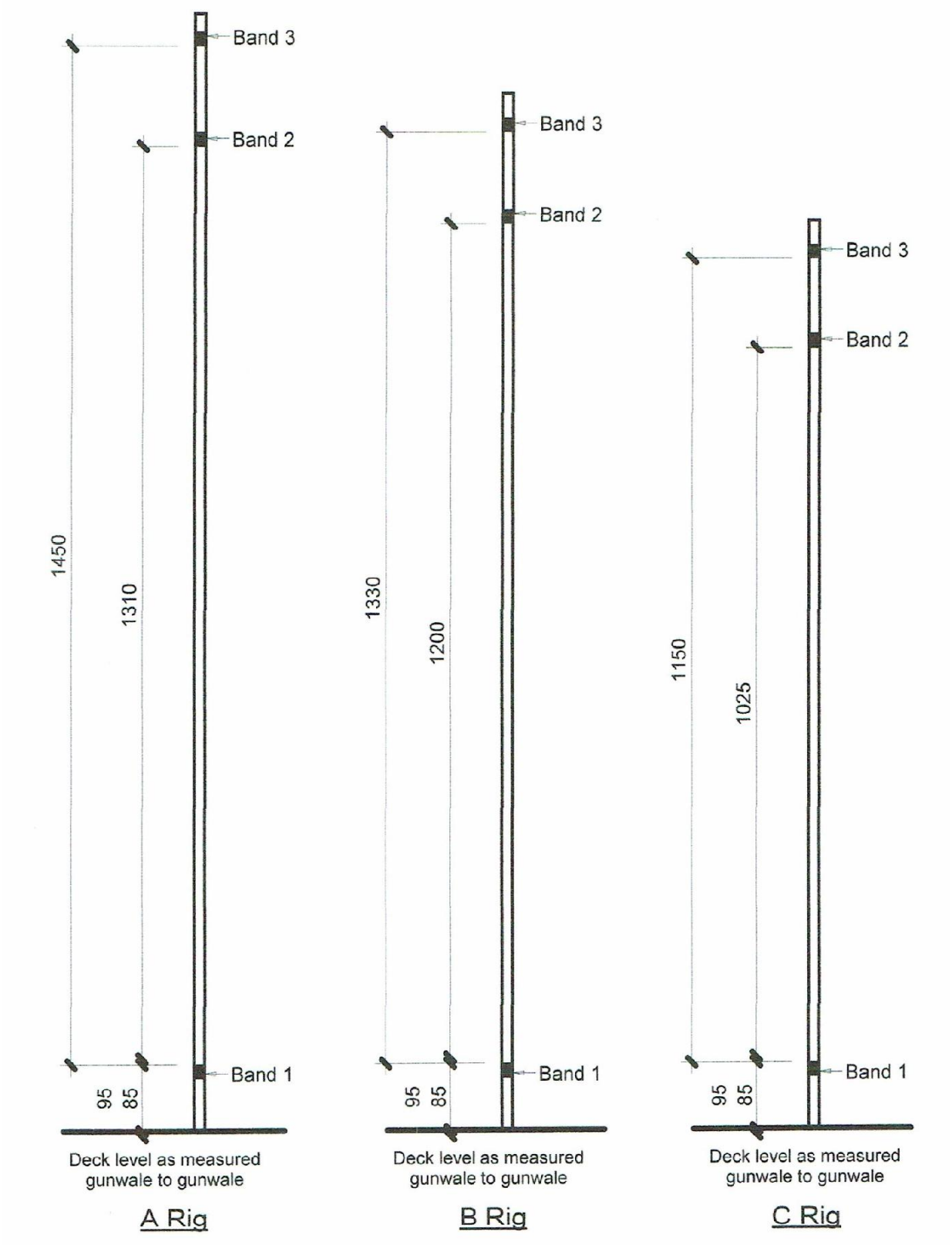

J Class Yacht A, B & C Rig
Mast Band Details

All dimensions in mm

4 Nov 2016

NOTES AND AMMENDMENTS

1) **November 2004**

From the Annual General Meeting of October 30th 2004 - General Business 5: -

> **Bow Bumpers** - Following on from the Minutes it was passed that the Class Rules 1.2 be amended as follows:-
> "That the Class Rules be added to, in order to show the fitting of a Bow Bumper on the Canterbury J Class be made mandatory. Such a bumper is to be a minimum of ten millimeters in thickness, not be included in the overall length, and to be subject to the Measurer's approval."

Moved by Peter Vincent and seconded by Mike Hefford - passed.
We noted that while we had no control over unmeasured boats, we should still make the fitting of bumpers a strong recommendation to other J owners.

2) August 2006:

The Class Advisory Committee will recommend to the 2006 AGM that the 10 mm dimensioning of Bow Bumpers (as above) be removed and the operative clause "subject to the Measurers' approval" be strengthened to allow for more flexibility.

> **August 14 2006 at the AGM** this recommendation was adopted so that for the Clause regarding bow bumpers; - Class Rules 1.2 is added to by way of an addition as follows:-
> "That the fitting of a Bow Bumper on the Canterbury J Class be made mandatory. Such a bumper is not included in the overall length and is to be subject to the Measurer's approval."
> Moved by Simon Ballantyne and seconded by Leon Blewett – passed

3) October 2007

The AGM the Rules were further amended;

a. Hull Numbering *(Peter Vincent/ Tom Arthur):* That Clause 2.1 to be added to, to reflect the requirement present on the Measurer's Certificate that the hull number should be clearly visible whenever the boat is measured. Passed

b. Carbon Fiber tubing for booms: *(Leon Blewett/Lloyd Harman)* "That the Class Rules 3.2 and 5.1.1 be amended to allow for the use of carbon fiber tubing as boom spars and that the Measurement Form is altered accordingly. Passed

4) November 2008 –

The 2008 AGM approved a revision of the Class Rules as here published. Details of the revisions made are to be found in the Appendix to the 2008 AGM Minutes. This Revision was signed off for publication at a Committee Meeting of 28th October.

5)October 2010 –

The AGM reviewed and changed the Aft Keel Face measurement to 215MM max overall. A new B rig was accepted, thereby degrading the old B rig to C rig status and abandoned the old C rig.

6) February 2014 – Special General meeting reviewed and changed to the following
Amend 3.2.4 to read
Measurement bands in a colour that contrasts with the mast shall be displayed as per the sail and mast diagram and chart.

Amend measurement chart and diagram to show H between top and bottom bands as
1450mm – 1330mm – 1150mm.

Amend chart and diagram to show I, between forestay band and bottom band as
1310mm - 1200mm - 1025mm. And name the bands from bottom up as **1, 2 & 3.**

Add to 4.1.1 Jib stay and / or jib halyard **shall intersect the mast below band 2.**
Amend 3.2.5 to; **Above the lower band 1, masts shall be of constant external circular diameter, without grooves for internal sail tracks. All fittings, holes, slots etc shall be ignored when considering the requirements of diameter. Internal stiffening and joining sleeves are permitted.**
Amend 3.2.6 to; **The center of the mast / mast stub, shall pass through the deck between points 490- 540mm from the bow. The center of deck stepped masts shall also be positioned between these two points on the deck.**

Amend 3.3.6 to **Below the lower band 1, any fitting or system may be used to step, support or control the position of the mast or boom.**

Delete 3.3.7

Replace 3.3.10 (3.3.9) with; **A fitting or system to mount the mast on the mast step.**

Amend 5.1.1 to **Construction; Booms shall be of constant external circular diameter, excluding fittings. Internal sail tracks shall not be permitted.**

Remove 3.2.5.

Amend rule 1.3 to. The Class shall consist of a fiberglass hull from the Class Association's official mold, a lead keel and trim weight from an approved mold, **a rudder as per specifications,** and rigs as per the sail plans with rigging that falls within the specifications. A bow bumper of a type approved by the Measurer shall be fitted and is not to be included within the overall length. Radio control is constrained to the use of two channels, being one rudder control and one coupled jib/main sail sheeting control.

Add to rule 2 heading, Hull, **keel, trim weight and rudder**

Note to add letter "s" to mold throughout document to cover NZ, UK and USA molds

Amend rule 2.2 to. Dimension of the hull. **All measurements shall be taken from the outside of the fiberglass hull shell and shall exclude any protective strips or belting around the gunwales. If used, these shall have a maximum thickness of 3mm external to the hull shell.**

Maximum overall length:	1220mm
Beams as measured from the bow:	
at quarter length (305mm):	145-150mm
at half length (610mm):	215-220mm
at three quarter length (915mm):	185-190mm

Add new rule **2.3 Appendages. No appendages shall be attached externally to the boat which extend beyond or below the gunwale, excepting;**
a) a bow bumper
b) attachments for the backstay
c) the rudder and its lower support

Amend 2.3.1 to 2.4 **The keel and trim weight shall be produced only from the Class Associations official molds or others approved by the Association. No materials other than lead shall be used.**

Amend 2.3.2 to 2.5 **The keel shall be bolted flush to the bottom of the keel stub and may be prepared and filled to provide a smooth underwater finish. No other additional weight or spacers shall be inserted between the keel stub and the keel. No additional weight in any form shall be inserted internally between the keel stub and the wooden floor.**

2.6. **The dimension of the stern post back edge shall be a maximum of 215mm. This shall be measured along the stern post from; the lower edge of the keel (lower rudder support included) to the intersecting lines of the hull.**

Amend rule 2.3.3 to 2.7 **The trim weight shall have a fixing hole of 8mm diameter centered 40mm (plus or minus 3mm) from the wider end and central between either edges. It shall be bolted onto the front keel bolt and lie flat on the wooden floor with the tapered end facing forward and shall be visible and accessible for inspection. Fittings may be attached to the trim weight. It shall not otherwise be altered from its original supplied state.**

Renumber current2.3.4 as 2.8

Amend 2.4 to The Rudder profile shall not exceed the official pattern (see relevant page for pattern) the rudder post shall be included within this area for measurement purposes.

The rudder thickness shall not exceed 15mm. The rudder shall not be ballasted.

2.10 **The rudder may be mounted using a lower fitting and shall lie parallel with the stern post with a gap not exceeding 4mm. The rudder lower fitting shall be no wider than the keel width at the attachment point.**

Add rule 2.6 **The dimension of the stern post back edge shall be a maximum of 215mm. This shall be measured along the stern post from; the lower edge of the keel (lower rudder support included) to the intersecting lines of the hull.**

The application of these new and revised rules are to commence with the next hull for sale number 257. Further discussion took place on this motion and there is no intention that boats numbered 1 - 256 should be disadvantaged by the changes. Boats numbering 257 and up are strictly under these new rules

7) October 2014.

The 16th AGM ruled that rule 8.2 be added; reading that any alteration or replacement shall be subject to the current class rules.

8) October 2015,

The 17th AGM added the Grandfather Clause 8.2

9) October 2016,.

Sail Identification rules changed and updated to follow Appendix E with a supplementary sheet showing details.

Sail plans changes to simplify and clarify. Sampling the leech line to split into quarters to get to horizontal measuring points abandoned to measuring vertically up from the tack and then across at 90 degrees.

Added to clause 2.5

If the supplied keel should be larger than the hull shell profile, it shall be reduced in size to conform to the hull shell. No altering of the hull shell is allowed.

10) October 2017, .

lause 7 altered to read at least 3 digits from the hull number to be used as sail identification.

Clause 7.2 Prefix & Suffix requirement removed.

11) October 2020, Clause 7.1 New Insignia adopted to include the letter "c" tucked into the hook of the letter "J".

A phase in period shall last 12 months and end 10th October 2021.

12) **October 2021, Clause 3.2.6 NOTE: This amendment applies from hull numbers 358 >**

The only positioning points available for the mast at deck level, (deck or keel stepped) shall be that the front of the mast is unable to be moved or placed forward of a point 490mm from the bow and the rear of the mast unable to be moved or placed behind a point 540mm from the bow.

Grandfather clause 3.2.6 for hull numbers < 358
The center of the mast / mast stub shall pass through the deck between points 490 -540 mm from the bow. The center of deck stepped masts shall also be positioned between these two points on the deck.

Clause 6.1.6 Corner reinforcements for the head, tack and clew are exempt from the width restriction of rule 6.1.5 but limited to a maximum width of 20mm. The reinforcement is limited to 125mm in length in any direction when measured from the corner measurement point.

Clause 3.3.7 A gooseneck fitting and its attachments. ~~No ball raced fittings will be permitted.~~

5.1.1 Construction: Booms shall be aluminium alloy, carbon fibre tube or wood and of a constant external circular diameter, or constant rectangular cross-section, excluding fittings. Internal sail tracks shall not be permitted.
5.1.2 Main boom fittings: Each main boom may have:
iii) A gooseneck fitting of any type or style.

12) October 2022,

REPLACES 1.3

1.3 The Canterbury J Class RC yacht shall consist of;
a. a fiberglass hull shell from the Class Association's official mould(s) and produced by the Class Associations official hull manufacturer(s).
b an external lead keel and internal lead trim weight from the Class Associations official mould(s) and produced by the Class Associations official lead manufacturer(s).
c. sails, rigging and a rudder in accordance with the class rules.
d. a bow bumper of a type approved by the Measurers.
e. a radio control system constrained to two channels controlling the rudder and coupled jib & main booms/sails.
REPLACES 2.1
2.1 a. The hull (shell) is a gel coated one piece moulding of glass reinforced polyester resin produced in accordance with clause 1.3 a. No fibres or cloth other than glass shall be used as a reinforcement of any resins used for completing the construction of the hull shell including its deck and rudder blade, but excluding any hull fittings that are not permanently attached and can be easily detached and reattached.
b. The registered hull number label as shown and detailed below is to be attached by polyester or epoxy resin into the interior of the hull on the starboard side between the two keel studs and between 70mm and 140mm below the gunwale. All the hull numbers shall be in sequential order and the Class Associations official hull and lead coordinator(s) shall be responsible for supplying and inserting this label.

c. A timber plate between 4mm and 7mm thick shall be glued directly onto hull shell floor at the very bottom with no additional weight between it and the hull shell floor. It shall follow the internal shape of the hull as close as possible and be covered by a two part epoxy or polyester resin. The Class Association's official hull and lead coordinator(s) shall be responsible for supplying and inserting this timber plate and applying the resin.

d. The external keel is a one piece moulded lead item produced in accordance with clause 1.3 b. No material other than lead can be used. Stainless steel threaded studs or bolts shall be inserted at the time of manufacture using the attached formers. It shall be labelled with its weight and weigh between 3550 Grams and 3850 Grams including the studs/bolts, nuts and washers.
e. The internal trim weight is a one piece moulded lead item produced in accordance with clause 1.3 b. No material other than lead can be used. It shall have an 8mm diameter fixing hole centred 40mm (plus or minus 3mm) from the wider end and central between either edges. It shall be labelled with its weight and weigh between 450 Grams and 650 Grams after being drilled.
f. The combined weight of the lead keel and lead trim weight supplied shall weigh between 4200 Grams and 4300 Grams.

REPLACES 2.2, (KEEP THE HULL DRAWING)
2.2 Dimensions of the hull.
All the relative hull measurements shall be taken from the outside of the fiberglass hull shell and shall exclude the bow bumper and any protective strips or belting around the gunwales. If used, these shall have a maximum thickness of 3mm external to the hull shell.
Maximum overall length: 1220 mm
Beams as measured from the bow:
at quarter length (305 mm): 145 -150 mm

at half length (610 mm): 215 -220 mm
at three quarter length (915 mm): 185 -190 mm

2.3 REMIANS THE SAME
2.4 The keel shall be bolted flush to the bottom of the keel stub and may be prepared and filled to provide a smooth underwater finish. If the supplied lead keel is of a size or shape different from the hull shell, it can undergo minor alterations in order to conform to the keel stub shape. No altering of the hull shell is allowed. No other additional weight or spacers shall be inserted between the keel stub and the external lead keel
2.5 The dimension of the stern post back edge shall be a maximum of 215mm. This shall be measured along the stern post from; the lower edge of the keel (lower rudder support included) to the intersecting lines of the hull.
2.6 The trim weight shall be bolted in place using the front keel bolt/stud and lie directly and flat on the timber plate/resin floor with the tapered end facing forward. It shall be visible and accessible for inspection and shall not otherwise be altered from its original supplied state. Fittings may be attached to the trim weight.
ITEM 2.8 BECOMES 2.7
ITEM 2.9 BECOMES 2.8
ITERM 2.10 BECOMES 2.9

8.1 A measurement process can be undertaken and if the finished boat is found to meet all the class rules a measurement certificate may be issued. The measurement process must be completed by the Class Associations official Measurer(s). The certificate remains valid providing the boat is maintained to the class rules. Measurement certificates can only be issued or replaced by the Class Associations official measurer(s).
ITEM 8.1 BECOMES 8.2
ITEM 8.2 BECOMES 8.3

5th October 2024

Appendix A, Internal weighted Canterbury J class (One Design) RC yachts.

1) The Canterbury J Class RC yacht may also be made with and internal keel weight.

2) Hulls to be made from the Associations official moulds, produced by the Class Associations official hull manufacturer(s) and supplied by the Canterbury J Class (One Design) Association.

3) Lead keels and trim weights to be made from the Associations official moulds, produced by the Class Associations official lead keel and trim weight manufacturer(s) and supplied by the Canterbury J-Class (One Design) Association.

4) Trim weights to be supplied with an approved mandatory spacer provided by the Canterbury J-Class (One Design) Association.

5) Lead keels and trim weights to be installed as per the Canterbury J Class (One Design) class rules instructions for internal weighted Canterbury J Class (One Design) RC yachts.

A. The keel weight shall be bonded to the inside of the keel shell.

B. If the supplied keel is difficult to locate inside the hull shell it can undergo minor alterations to allow it to fit, otherwise no alterations to the lead keel are allowed.

C. The rear keel bolt / stud may be removed.

D. No alterations to the hull shell are allowed.

E. The trim weight complete with the supplied spacer / packer shall be bolted in place using the front keel bolt/ stud with the tapered end facing forward, it shall be visible, accessible, and removable for inspection and shall not otherwise be altered from its original state the front keel bolt/ stud with the tapered end facing forward, it shall be visible, accessible and removable for inspection and shall not otherwise be altered from its original state

8th October 2025

Defines minimum mast Diameter as 9mm.
3.2.1 Masts shall comply with the measurement specifications in these rules. The basic mast section shall be constructed of either aluminium alloy or wood, ***with a diameter of no less than 9 mm***. No other materials will be allowed. Fittings however may be of other materials.

10th October 2026)

3.0 The Deck.

3.1 Is defined as a floor like exterior structure or platform covering the top of the vessel's hull shell from gunwale to gunwale, bow to stern, it shall have a uniform thickness not exceeding 5mm.

3.2 For the purposes of measurement, a straight line is taken from the bow and stern of the boat and is established exclude the bow bumper, protective strip(s), belting and toe rail, it is divided into 2 areas, the "fore deck" and the "rear deck".

3.3 The mast, step and mast stub, all small essential deck fittings e.g., chain plates, rigging points, sheet fittings & posts, eyebolts, bow bumper, mast ram, boom anchoring points, pulleys, blocks, tape down hatches and toe rails, are exempt when considering "structures".

3.4 Fore deck

3.4.1 This may be raised and rounded.

3.4.2 No part of the deck is permitted above the “base line”.

3.4.3 The “ending” of the raised deck may be any shape.

3.4.4 The ending of this deck shall not extend past a point 610mm from the bow.

3.4.5 Any structure has its height limited to the same as this deck, the base line.

3.5 Rear deck

3.5.1 This may be raised or rounded and no higher than 5mm above the top of the gunwale at any point.

3.5.2 Any structures are limited to a maximum of two, a main (winch) hatch or access point and rear (rudder) hatch or access point.

3.5.3 These two structures when complete and in place shall;

- a Have the maximum height not exceeding the base line plus 25mm.
- b Be separated by a minimum of 150mm.
- c Be square, rectangular or circular.
- d Have the main hatch with no side exceeding 160mm long, not exceed a diameter of 180mm and not exceed 256 square centimetres.
- e Have the rudder hatch with no side exceeding 106mm long, not exceed a diameter of 120mm and not exceed 114 square centimetres.

This class rule begins at hull number 398 (External lead); 437 (Internal lead) all older boats are subject to clauses 8.2 and 8.3 providing they are and remain in their originally built condition and configuration with no modifications or additions, temporary or otherwise.